INHIBITING FACTORS FOR THE DEVELOPMENT OF TECHNOLOGICAL PROJECTS IN HEI´s IN CIUDAD JUAREZ

DOI: https://doi.org/10.17981/mod.arq.cuc.35.1.2025.10

Tomás Francisco Limones Meraz[1]
Universidad Autónoma de Ciudad Juárez;
Tecnológico Nacional de México, Instituto Tecnológico de Ciudad Juárez
tlimones@itcj.edu.mx

Salvador A. Noriega Morales
Universidad Autónoma de Ciudad Juárez
snoriega@uacj.mx

Carmen Reaiche
James Cook University, Australia
carmen.reaiche@jcu.edu.au
https://orcid.org/0000-0001-5628-7504

Roberto Romero López
Universidad Autónoma de Ciudad Juárez
rromero@uacj.mx

Eduardo Poblano Ojinaga
Tecnológico Nacional de México, Instituto Tecnológico de Ciudad Juárez
eduardo.po@cdjuarez.tecnm.mx

Para citar este artículo:
Limones Mireles, T. F., Noriega Morales, S. A., Beatriz, C., Romero López, R., & Poblano Ojinaga, E. (2025). Inhibiting factors for the development of technological projects in HEI's in Ciudad Juarez. Módulo Arquitectura CUC, 35, 238–259. https://doi.org/10.17981/mod.arq.cuc.35.1.2025.10

Abstract

Technological projects have an impact on economic and social development, constitute an important source of income for Higher Education Institutions (HEIs), and at the same time represent an important source of competitive advantage for the productive sectors. In Ciudad Juarez, located on the northern border with the USA, there are more than 320 multinational companies with industrial plants, most of which need technological projects to increase efficiency and competitiveness. However, although both parties, HEIs and companies, have the potential to carry out projects that benefit them, this activity does not take place. Therefore, the aim of this research project is to identify the inhibiting factors for the development of technological projects in five HEIs in Ciudad Juarez. It starts with the validation of the measurement instrument for the identification of these factors (Limones et. al., 2023), proceeds to its application by Google Forms with the participation of educational staff, obtaining feedback from 542 participants. Using the technique of Exploratory Factor Analysis (EFA), the set of common variables or factors that explain the underlying dimensions are explored, using IBM SPSS® Statistics 26 software. Subsequently, using the Confirmatory Factor Analysis (CFA) technique, the construct is validated using IBM SPSS® Amos AMOS software, version 22. The results of the data screening process, by performing the Mahalanobis Distance (D2) test (Medrano and Muñoz-Navarro, 2017), are reduced from 542 to 515 (27 outliers). The correlation table of the data indicates low values, so a varimax rotation analysis is performed with KMO (Kaiser-Meyer-Olkin) goodness-of-fit tests, developing the exercise by dimension. The KMO of 0.649 is considered good and the chi2 test of sphericity is significant at 0.05. Only two variables show a low extraction index in the communalities analysis, with low factor loadings that, when eliminated, the rotated components are aligned to only three dimensions, decreasing from 24 to 22 variables. By means of the development of the confirmatory factor analysis, Fit Indices are obtained that validate the final model concluding in three dimensions with 22 variables.

Keywords: Technology projects, factors, factor analysis, HEIs.

Resumen

Los proyectos tecnológicos tienen un impacto en el desarrollo económico y social, constituyen una importante fuente de ingresos para las Instituciones de Educación Superior (IES), y al mismo tiempo representan una importante fuente de ventaja competitiva para los sectores productivos. En Ciudad Juárez, ubicada en la frontera norte con Estados Unidos, existen más de 320 empresas multinacionales con plantas industriales, la mayoría de las cuales necesitan proyectos tecnológicos para incrementar su eficiencia y competitividad. Sin embargo, aunque ambas partes, IES y empresas, tienen el potencial de realizar proyectos que los beneficien, esta actividad no se lleva a cabo. Por lo tanto, el objetivo de este proyecto de investigación es identificar los factores inhibidores para el desarrollo de proyectos tecnológicos en cinco IES de Ciudad Juárez. Se inicia con la validación del instrumento de medición para la identificación de estos factores (Limones et. al., 2023), se procede a su aplicación mediante Google Forms con la participación del personal educativo, obteniendo retroalimentación de 542 participantes. Mediante la técnica de Análisis Factorial Exploratorio (AFE), se explora el conjunto de variables o factores comunes que explican las dimensiones subyacentes, utilizando el software IBM SPSS® Statistics 26. Posteriormente, mediante la técnica de Análisis Factorial Confirmatorio (AFC), se valida el constructo utilizando el software IBM SPSS® Amos AMOS, versión 22. Los resultados del proceso de cribado de datos, mediante la realización del test de Distancia de Mahalanobis (D2) (Medrano y Muñoz-Navarro, 2017), se reducen de 542 a 515 (27 valores atípicos). La tabla de correlaciones de los datos indica valores bajos, por lo que se realiza un análisis de rotación varimax con pruebas de bondad de ajuste KMO (Kaiser-Meyer-Olkin), desarrollando el ejercicio por dimensiones. El KMO de 0,649 se considera bueno y la prueba chi2 de esfericidad es significativa al 0,05. Sólo dos variables presentan un bajo índice de extracción en el análisis de comunalidades, con bajas cargas factoriales que, al ser eliminadas, los componentes rotados se alinean a sólo tres dimensiones, disminuyendo de 24 a 22 variables. Mediante el desarrollo del análisis factorial confirmatorio se obtienen Índices de Ajuste que validan el modelo final concluyendo en tres dimensiones con 22 variables.

Palabras Clave: Proyectos Tecnológicos, factores, Análisis, IES.

1 Dr. Tomás Francisco Limones Méraz, is Professor of Engineering at the Instituto Tecnológico de Cd. Juárez, with more than 21 years of experience in the Manufacturing Industry tlimones@itcj.edu.mx, and currently a student of the Postdoctoral Academic Stays in Mexico 22 (3) programme, CONACYT (Corresponding Author).

© The author; licensee Universidad de la Costa - CUC.

BACKGROUND

It is important to recognize the role that Higher Education Institutions play in the generation and transfer of knowledge and technology needed by companies (Segura et. al., 2012). HEIs in the region, as knowledge producers, must fulfil their mission of ensuring that the knowledge produced in HEIs contributes to the social context in which it is located (Etzkowitz, 1990), by strengthening the capacity to generate ideas and innovation and technological development projects with an impact on the competitiveness of the regional productive sector (De Fuentes and Dutrénit, 2017) and on social and economic development (Feser & Bergman, 2000). Ciudad Juarez is one of the main regions in the country where export products are manufactured, with more than 320 export manufacturing plants. These companies, in order to maintain their productive processes in operation, require products and services, which has generated a dynamic of economic and social development that has driven the creation of MSMEs for local supply, with currently more than 2,400 micro, small and medium-sized enterprises for the regional market. The existing link between academia and the productive sector in this region is based on the internships and residencies that students carry out in companies (Limones et al., 2021); however, there is a lack of a relationship that focuses on research and development of technological projects. This link between academia and industry has bidirectional effects that limit the success of this relationship focused on research and development of technological projects. The first one is focused on the factors that are influencing the link between the productive sectors and the HEIs for the management of innovation and technological development projects, and the second one is focused on the HEI community itself, in order to promote the development of these projects, the federal government proposes the government programmes described in the following paragraph.

In the National Development Plan 2019-2024, the Special Programme for Science, Technology and Innovation (PECiTI)[2] aligns the open innovation ecosystem with national priorities, seeking to reduce technological dependence and promoting the construction of strategic agendas for technological development and innovation to meet national demands in an effective, efficient and articulated manner. For its part, the National Strategic Programmes (Pronaces)[3], has proposed that through the articulation of the scientific-technical capacities of students and teachers, solutions to technological problems and needs should be sought through the development and application of theoretical-practical knowledge, proposing as a result the dissemination of new acquired knowledge.

2 Special Programme for Science, Technology and Innovation 2021-2024 (PECITI); https://conacyt.mx/conacyt/peciti
3 National Strategic Programmes; https://conacyt.mx/convocatorias/programas-nacionales-estrategicos (ProNacEs)

It establishes that with the participation of universities, peoples, scientists and companies, supported through a public policy, it should be ensured that scientific knowledge oriented towards the solution of national problems is translated into sustainable solutions, fostering the country's technological independence. The National Council for Humanities, Science and Technology (CONAHCyT), a decentralized public body of the Federal Government, is dedicated to the promotion of scientific and technological research, as well as innovation, development and modernization of the country's productive and social sectors, deploying strategies for the training of high-level personnel and support for scientific research.

Finally, it is important to mention that indicators in HEIs related to the development of projects linked to the productive and social sector are closely related to the generation and management of Intellectual Property (Bosch et al., 1999). This explains the relevance of identifying the inhibiting factors for the development of technological projects, necessary for the development of an effective model for the management of these projects.

THE HEIS IN THE REGION

The graduates in Ciudad Juárez are concentrated in four HEIs, the Instituto Tecnológico de Ciudad Juárez (ITCJ), the Universidad Tecnológica Paso del Norte (UTPN), the Universidad Autónoma de Ciudad Juárez (UACJ) and the Universidad Tecnológica de Ciudad Juárez (UTCJ) with an approximate percentage of participation of 79% of the total number of graduates from the region's HEIs4. The areas of specialization of the educational programmes are designed with quality and relevance to cover the needs of professionals for the productive and social sectors of the region. However, these priority needs covered by HEIs do not correlate with the results of research and development of technological projects, regularly referenced in the number of patents and utility models generated by HEIs (Filippetti and Savona, 2017). Table 1 shows the progress of the five HEIs in the region in terms of intellectual property (IP) generation.

Table 1. Progress in the generation of intellectual property HEIs in the region

HEI´s	Patenting	Utility Models	Industrial Designs	Comercialization of the Project
UACJ	48	17	16	0
ITCJ	0	2	7	0
URN	2	0	4	1
UTCJ	0	0	0	0
UTPN	0	0	0	0

Source: Own generation, data from the General Coordination of Research and Postgraduate Studies, OTT.PI of the UACJ and data from Postgraduate Studies, Linking and Innovation Node of the ITCJ.

The data in Table 1 show the low IP production of HEIs, reflecting the low impact on innovation and development of technological

4 http://www.seech.gob.mx/estadistica/#estadistica

projects in the region and the need to promote collaboration between HEIs and the productive sectors, which confirms the reports of Solleiro et al., 2008, of these projects in other regions of the country, as also reported by Calderón (2014). To address this problem, Mauro (2021) states that a governance model is needed; an administrative model that promotes operational and infrastructure strengthening to support the regional needs of innovation and technological development projects, including access to information on technological developments in the state of the art, which is considered fundamental for economic development (Joham & Hobson, 2003). Based on these considerations it is relevant to create a management model and for that purpose, it is necessary to determine the factors of the development of these projects.

The analysis presented in the regional environment in relation to the progress and impact of the Generation of Innovation and Technological Development projects to date shows an opportunity for growth in two important areas: The first is related to the need to promote links between SP companies and HEIs in the region. The second is to assess the factors that are limiting development activities, based on the participation of the scientific and technological community of HEIs.

METHODOLOGY

For the development of this research, the preliminary result defined as "Validation of the measurement instrument for identifying factors that inhibit the participation of students, teachers, and researchers in the development of technological projects in higher education institutions in Ciudad Juárez" is considered (Limones et al., 2023), which highlights preliminary bibliographic studies carried out on this subject (Flores C. et al. 2015), (Palacios et al., 2021). The instrument is validated from a qualitative, exploratory descriptive, non-experimental design perspective. Considering this measurement instrument, its implementation is carried out with the participation of 542 individuals belonging to the five main HEIs in the Ciudad Juárez region. Figure 1 shows the theoretical model validated and defined for its implementation.

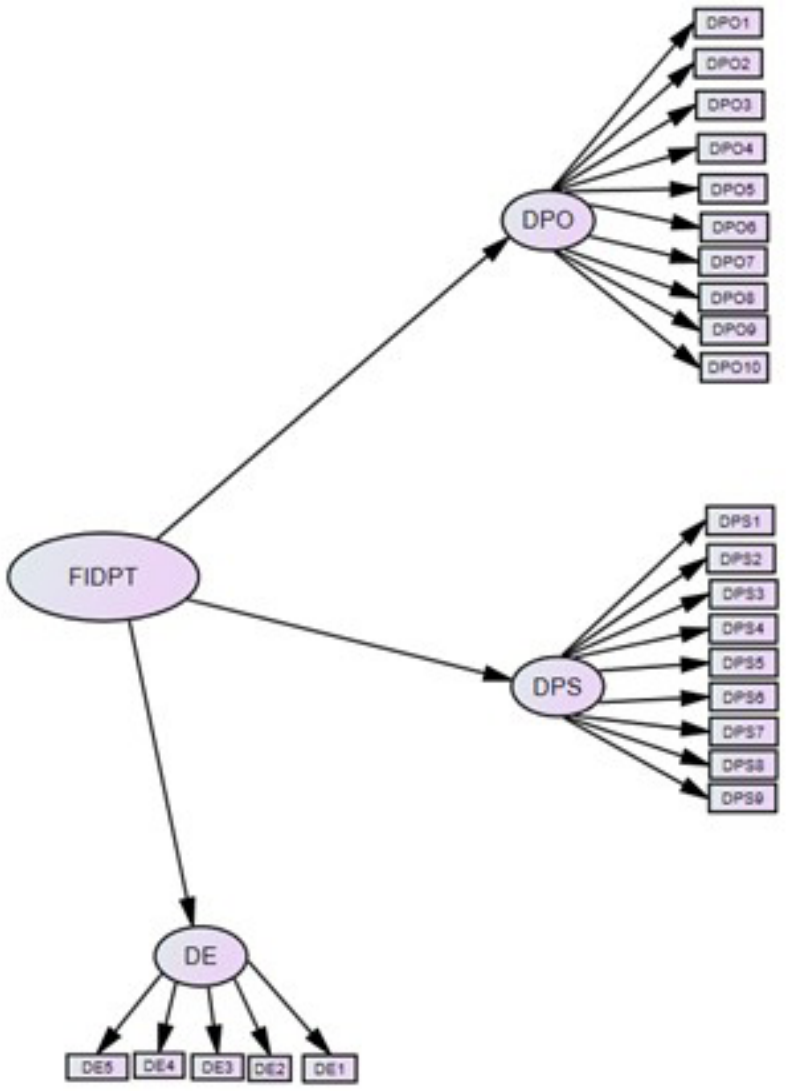

Figure 1. Theoretical model validated as a measurement tool

The model is constituted by three different dimensions considered as observable variables, corresponding to the economic dimension, the psycho-social dimension and the psycho-organizational dimension, which are measured by means of 24 items-variables adapted to the three dimensions and which build the meaningful model.

The amount of data obtained by the measurement instrument and assessed is 542 instruments distributed according to their participation. Table 2. shows the frequency and size of the sample obtained.

Table 2. Frequency and percentage of participation by HEIs in the region

HEI´s	Frecuency	Porcentaje	Accumulated Percentage
UACJ	66	12.1	12.1
ITCJ	258	47.3	59.4
UTCJ	20	3.7	63.1
UTPN	170	31.2	94.3
OTROS	28	5.7	100

Table 3 shows the characteristics of the participants, the most relevant being students with a frequency of 454 instruments, representing 83.3% of the sample, followed by teachers with a total of 68 instruments, representing 12.5% of the sample.

Table 3. Characteristics of the participants in the sample obtained from HEIs

Personnel	Frecuency	Percentage	Accumulated Percentage
Estudiantes	454	83.3	83.3
Docentes	68	12.5	95.8
Investigadores	13	2.4	98.2
Administrativos	4	0.7	98.9
Directivos	5	1.1	100

With the collection of information from the 542 individuals, the data sifting process begins, for which two main stages of the data

analysis process are established, the first being the Exploratory Factor Analysis in which the IBM SPSS® Statistics 26 software is used to verify the behaviour and interpretation of the answers given by the population and also the relationships between factors. It identifies the underlying, latent variables that explain the existing relationship between a set of items that are the observed variables, for which the reduction of dimensions is carried out. For the second stage, the Confirmatory Factor Analysis model is used, which evaluates the matrix of real data corresponding to those favourable items of the exploratory factor analysis, which are verified with the probability data matrix, this being a model of adjustment, in which it is assessed whether or not they match, whether or not they adjust the data, using the IBM SPSS® Amos, version 22, of structural equations. It is important to mention that a previous step to the exploratory factor analysis is the identification and segregation of missing values and outliers provided in the responses of the 542 participants, for which the Mahalanobis test is applied using the IBM SPSS® Statistics 26 software, determining the similarity between multidimensional random variables and identifying the data that are outside a range when comparing the theoretical model for construct validity.

RESULTS

Atypical Data

Within the process of identifying outliers, the Mahalanobis distance test (D2) represents a central chi-square statistic, with degrees of freedom equal to the number of variables. This test is performed with the information provided by the 542 participants on the 24 variables considered in the construct, using IBM SPSS® Statistics 26 software. The results were ordered from highest to lowest, finding cut-off distances ranging from 102.31309 to 0.89338. Three sample elements were discarded as they contained missing data. A conservative cut-off threshold Alpha=.001 according to Kline (2003) is used for the consideration of outliers. Table 4 represents the multivariate outliers where the cut-off Mahalanobis distance is defined as directly related to the number of variables.

Table 4. Datos atípicos multivariantes

No. of variables	D2 of cutting	No. of variables	D2 of cutting
3	16.26624	10	29.5883
4	18.46683	12	32.90949
5	20.51501	15	37.6973
6	22.45774	18	42.3124
7	24.32189	20	45.31475
8	26.12448	25	52.61966
9	27.87716	30	59.70306

Considering that all values of Mahalanobis distances greater than the cut-off (D2>cut-off) are considered outliers, the cut-off distance for

25 variables (in this study 24 variables have been considered in the construct) of 52.61966 is considered for this study. By adjusting the data, the individuals whose cut-off distances oscillate between the threshold of 102.31309 and 53.38442 are eliminated, making a total of 27 individuals, going from 542 to 515 data. This filtered sample is used to perform the exploratory factor analysis.

Exploratory Factor Analysis

As there are five, nine and ten variables in the three dimensions considered, the requirement of having at least three variables per dimension is fulfilled. An important exercise before identifying the type of rotation to perform during the factor analysis is to check the table of correlations between constructs. For the specific case of this research, the results of the correlations are mostly lower than 0.3 (.002, .019, .196, among others), so for this type of results an orthogonal varimax rotation analysis is performed, which is used for low correlations lower than 0.7.

Dimension reduction (First general)

Through of descriptive factor analysis of dimension reduction using the principal component extraction method based on eigenvalues of 1 and varimax rotation, a new analysis is carried out in which the variables of the economic dimension (5), the variables of the psycho-organizational dimension (10) and the variables of the psycho-social dimension (9) are included. The results indicate a rotated four-component matrix. In order to perform a more user-friendly and reliable analysis, when there are several dimensions, it is recommended to carry out the analysis dimension by dimension to control the rotated components matrix, this being a simpler procedure, since the factor analysis is carried out on the variables-reactives corresponding to each dimension. The analysis is carried out dimension by dimension, starting preliminarily with the variables of the economic dimension (5). Table 5 shows the communalities matrix, finding that the lowest factor loadings correspond to the DE3 variable.

Table 5. Communalities Matrix

Variable	Description	Initial	Extraction
DE1	The financial resources offered to carry out the project are not sufficient.	1.000	0.693
DE2	More sources of funding are needed.	1.000	0.730
DE3	Payments and/or financial incentives for students, teachers and researchers are not sufficient.	1.000	0.447
DE4	Support in material resources for workshops and laboratories is not sufficient.	1.000	0.461
DE5	Budgets for workshop and laboratory equipment and machines are not sufficient.	1.000	0.491

Table 6 shows the rotated component matrix with the extraction level factor loadings for each variable. To perform the factor analysis, a

simpler procedure is to perform the factor analysis on the items corresponding to each dimension, i.e. to perform it dimension by dimension.

Table 6. Extraction level for variables, economic dimension

Variable	Description	Component	
		1	2
DE2	More sources of funding are needed.	0.851	
DE1	The financial resources offered to carry out the project are not sufficient.	0.815	
DE5	Budgets for workshop and laboratory equipment and machines are not sufficient.		0.698
DE4	Support in material resources for workshops and laboratories is not sufficient.		0.676
DE3	Payments and/or financial incentives for students, teachers and researchers are not sufficient.		0.644

From Table 6 it can be deduced that the data are distributed in two (economic) dimensions, where dimension 1 is explaining the highest variance (0.851 and 0.815). The next dimension explained factor loadings are denoted by the three remaining items (0.698, 0.676 and 0.644). The items lower than 0.3 are those whose contribution is low and should therefore be eliminated. For this result, it is not necessary to eliminate any item, however, the fact that two components appeared in the economic variable, merits adjustments in terms of the reduction of dimensions.

Continuing with the analysis of the total variance explained, the result in this case is a result of 2 components that explain more than 50% of the instrument. Table 7 shows the total variance explained, which reaches an accumulated 56.427% in two components, proving the validity of the construct.

Table 7. Total variance explained, economic dimension

	Initial Values		Sum of loads squared by rotation		
Component	% of variance	% accumulated	Total	% of variance	% accumulated
1	36.316	36.316	1.429	28.578	28.578
2	20.111	56.427	1.392	27.849	56.427
3	16.407	72.834			
4	15.713	88.547			
5	11.453	100.000			

Economic dimension adjustment

At the extraction level for the economic variable, two components were generated, so it is necessary to make adjustments so that only one component appears, which corresponds to the economic dimension. The variable DE3 is the first term considered to be eliminated as it has a lower factor load of extraction of 0.447 (Table 5); however, it is decided to eliminate the variable DE5 given the similarity in description that exists with the variable DE4, so we proceed to make the adjustment of reduction of dimensions, eliminating this item DE5. Table 8 shows the result of the extraction method of the principal component analysis when eliminating this variable.

Table 8. Component matrix, economic dimension

Variable	Description	Component 1
DE1	The financial resources offered to carry out the project are not sufficient.	0.752
DE2	More sources of funding are needed.	0.731
DE3	Payments and/or financial incentives for students, teachers and researchers are not sufficient.	0.562
DE4	Support in material resources for workshops and laboratories is not sufficient.	0.504

Table 9. KMO y Bartlett´s test

Kaiser-Meyer-Olkin measure of sampling adequacy		0.606
Bartlett's test of sphericity	Approx. Chi-square	158.566
	gl	6
	Sig.	.000

Table 9 shows the result of the KMO and Bartlett's test with one-component extraction, where the results are aligned to a single dimension. The KMO result is 0.606, lower than the minimum desirable 0.7. The value of Bartlett's Chi-square test of sphericity should be less than 0.05 and the significance level is 0.000 considered good. Table 10 shows the total explained variance of 41.754% in one component, which despite being below 50%, its approximation is considered acceptable in this individual rotation, which should prove its construct validity when assessed together with the other two dimensions.

Table 10. Total variance explained, economic dimension.

Component	Initial values		Sum of loads squared by rotation		
	% of variance	% accumulated	Total	% of variance	% accumulated
1	41.754	41.754	1.670	41.754	41.754
2	23.843	65.597			
3	20.038	85.635			
4	14.365	100.000			

Psycho-social dimension reduction

Through of the descriptive factor analysis of dimension reduction using the principal components extraction method and varimax rotation, a new analysis is carried out in which the variables of the Pisco-social dimension are included (9). Table 11 shows the rotated component matrix with the extraction factor loadings for each variable.

Table 11. Rotated Component Matrix, Psychosocial dimension

Variable	Description	Component	
		1	2
DPS6	Little creativity.	0.797	
DPS5	Fear of failure.	0.768	
DPS4	Lack of interest.	0.688	0.374
DPS7	The adverse family context.	0.677	
DPS8	Learning environments and habits for the development of technological projects are not adequate.	0.595	0.457
DPS9	The absence of recognition for achievements.	0.542	0.423
DPS3	Theoretical and practical expertise is not enough.	0.528	0.519
DPS1	Lack of time.		0.780
DPS2	Low motivation.		0.751

From Table 11 it can be deduced that the data are distributed in two dimensions (Psycho-social), where dimension 1 is explaining the highest variance (0.797, 0.768, 0.688, 0.677, 0.595, 0.542, 0.528). For the second dimension (component 2) the explained factor loadings are denoted by the remaining six items (0.374, 0.457, 0.423, 0.519, 0.780, 0.751). The variance explained by two variables gives a cumulative percentage of 57.240, higher than the minimum desirable 50% and the KMO is 0.875, higher than the minimum desirable 0.7. The value of Bartlett's Chi-square sphericity test should be less than 0.05 and the significance level obtained was .000. Table 12 shows the total variance explained which accumulates 57.240% in two components that explain more than 50% of the instrument, proving the construct validity.

Table 12. Total variance explained, psycho-social dimension.

	Initial Values		Sum of loads squared by rotation		
Component	% of variance	% accumulated	Total	% de variance	% accumulated
1	45.496	45.496	3.159	35.097	35.097
2	11.744	57.240	1.993	22.143	57.240
3	9.868	67.108			
4	7.000	74.108			
5	6.457	80.565			
6	5.850	86.414			
7	4.893	91.307			
8	4.442	95.749			
9	4.251	100.000			

Adjustment Psycho-social dimension

At the extraction level for the Psycho-social variable, two components were generated, so it is necessary to make adjustments so that only one component appears corresponding to the Psycho-social dimension. The variable DPS1 is considered as the first term to be eliminated as it has a direct factor loading relationship to the second construct. Table 13 shows the result of the extraction method of the principal components analysis when eliminating the variable DPS1.

Table 13. Component matrix, Psycho-social dimension

Variable	Description	Component 1
DPS4	Lack of interest.	0.788
DPS8	Learning environments and habits for the development of technological projects are not adequate.	0.753
DPS6	Little creativity.	0.735
DPS3	Theoretical and practical expertise is not enough.	0.724
DPS9	The absence of recognition for achievements.	0.694
DPS5	Fear of failure.	0.686
DPS2	Low motivation.	0.624
DPS7	The adverse family context.	0.613

The result shows the extraction of one component, which aligns the results to a single dimension. Table 14 shows the total variance explained which reaches a cumulative 49.590% in one component with eight variables, proving the construct validity. The variance explained is reduced to 49.590, lower than the minimum desirable 50% and the KMO is 0.883 higher than the minimum desirable 0.7 and the Bartlett Chi-square sphericity test value should be less than 0.05 and the significance level obtained was .000.

Table 14. Varianza total explicada, dimensión psico-social.

	Initial Values		Sum of loads squared by rotation		
Component	% of variance	% accumulated	Total	% of variance	% accumulated
1	49.590	49.590	3.967	49.590	49.590
2	12.059	61.649			
3	7.993	69.642			
4	7.807	77.449			
5	6.895	84.344			
6	5.667	90.012			
7	5.205	95.217			
8	4.783	100.000			

Psycho-organisational dimension reduction

Through of the descriptive factor analysis of dimension reduction using the principal components extraction method and varimax rotation, the new analysis is carried out in which the variables of the Pisco-organisational dimension (10) are included. Table 15 shows the rotated component matrix with the extraction factor loadings for each variable.

Table 15. Rotated Component Matrix, Psycho-organizational Dimension

Variable	Description	Component 1
DPO7	The lack of updating and relevance of the didactic content of curricula oriented towards technological development.	0.814
DPO5	The lack of an organizational, administrative and operational structure (procedural).	0.811
DPO8	The lack of a culture of technological development.	0.809
DPO4	The infrastructure and equipment support for research and development of technological projects is not sufficient.	0.795
DPO6	Linking with the productive sector is not enough.	0.790
DPO2	Poor administrative support.	0.768
DPO9	Awareness and access to technological formation is insufficient.	0.761
DPO3	The lack of specialized teaching support.	0.758
DPO1	Dissemination, promotion and outreach towards innovation and project development is not enough.	0.705
DPO10	The lack of change in government policy on this issue.	0.656

From Table 15 it can be deduced that the data are distributed in one dimension (Psycho-organizational), where the explained factor loadings are denoted by the ten items (0.814, 0.811, 0.809, 0.795, 0.790, 0.768, 0.761, 0.758, 0.705, and 0.656). The variance explained result gives a cumulative percentage of 59.040, higher than the minimum desirable 50% and the KMO is 0.946 higher than the minimum desirable 0.7. The value of Bartlett's Chi-square sphericity test should be less than 0.05 and the significance level obtained was .000. Table 16 shows the total variance explained which gives a cumulative 59.040% in a component that explains more than 50% of the instrument, proving the construct validity.

Table 16. Total variance explained, psycho-organizational dimension

	Initial values		Sum of loads squared by rotation		
Component	% of variance	% accumulated	Total	% of variance	% accumulated
1	59.040	59.040	5.904	59.040	59.040
2	7.648	66.687			
3	6.114	72.801			
4	5.449	78.250			
5	4.344	82.594			
6	3.949	86.543			
7	3.769	90.312			
8	3.480	93.792			
9	3.349	97.141			
10	2.859	100.000			

Dimensions reduction (Second general)

Through of descriptive factor analysis of dimension reduction using the principal component extraction method based on eigenvalues of 1 and varimax rotation, the new conjoint analysis is carried out, where the adjusted variables of the economic dimension (removing the variable “Budgets for workshop and laboratory equipment and machines are not sufficient”), the variables of the psycho-organisational dimension and the adjusted variables of the Pisco-social dimension (removing the variable “lack of time”) are included. Table 17 shows the results in a rotated component matrix of three, corresponding to the three dimensions analyzed.

Table 17. Matriz de componente rotado, de las tres dimensiones

Variable	Descripción	Componente		
		1	2	3
DPO7	The lack of updating and relevance of the didactic content of curricula oriented towards technological development.	0.791		
DPO5	The lack of an organizational, administrative and operational structure (procedural).	0.781		
DPO6	Linking with the productive sector is not enough.	0.769		
DPO4	The infrastructure and equipment support for research and development of technological projects is not sufficient.	0.762		
DPO2	Poor administrative support.	0.750		
DPO8	The lack of a culture of technological development.	0.741		

DPO9	Awareness and access to technological formation is insufficient.	0.727		
DPO3	The lack of specialized teaching support.	0.699	0.316	
DPO1	Dissemination, promotion and outreach towards innovation and project development is not enough.	0.650		
DPO10	The lack of change in government policy on this issue.	0.596		
DPS6	Little creativity.		0.763	
DPS5	Fear of failure.		0.745	
DPS4	Lack of interest.		0.734	
DPS7	The adverse family context.		0.669	
DPS8	Learning environments and habits for the development of technological projects are not adequate.	0.410	0.608	
DPS3	Theoretical and practical expertise is not enough.	0.382	0.601	
DPS9	The absence of recognition for achievements.	0.378	0.555	
DPS2	Low motivation.	0.313	0.501	
DE1	The financial resources offered to carry out the project are not sufficient.			0.684
DE3	Payments and/or financial incentives for students, teachers and researchers are not sufficient.			0.661
DE2	More sources of funding are needed.			0.624
DE4	Support in material resources for workshops and laboratories is not sufficient.			0.513

The result of the variance explained is 53.521, higher than the minimum desirable 50% and the KMO is 0.941 higher than the minimum desirable 0.7. The value of Bartlett's Chi-square test of sphericity should be less than 0.05 and the significance level obtained was .000. Table 18 shows the total variance explained which accumulates 53.521% in three principal components with twenty-two adjusted variables, proving the excellent construct validity.

Table 18. Total explained variance of the three rotated dimensions

	Initial values		Sum of loads squared by rotation		
Component	% of variance	% accumulated	Total	% of variance	% accumulated
1	37.884	37.884	6.100	27.727	27.727
2	9.277	47.161	3.899	17.722	45.449
3	6.360	53.521	1.776	8.072	53.521
4	4.447	57.968			
5	4.406	62.374			
6	3.519	65.892			
7	3.476	69.369			
8	3.181	72.549			
9	2.739	75.289			
10	2.726	78.014			
11	2.519	80.534			
12	2.395	82.929			
13	2.353	85.281			
14	2.040	87.321			
15	1.920	89.242			
16	1.861	91.103			
17	1.740	92.843			
18	1.648	94.491			
19	1.537	96.028			

20	1.423	97.451
21	1.367	98.818
22	1.182	100.000

Ratification of the Reliability-Trustworthiness Test

Based on Pearson's correlation of normality (Oliden & Zumbo, 2008), Cronbach's Alpha reliability test is performed to obtain the degree to which the measurement system will produce the same result between measurements over time, a test considered as an internal consistency analysis of reliability. The result of running the 22 variables with the three corresponding dimensions yields a Cronbach's Alpha based on standardized items of 0.912.

Confirmatory Factor Analysis

The Confirmatory Factor Analysis evaluates the actual data matrix corresponding to those favourable items of the exploratory factor analysis, being an important consideration when performing the confirmatory analysis to only consider those variables-reagents that passed the exploratory factor analysis, which will be verified with the probability data matrix being this a fit model, where it will be assessed if they match or not, if they fit or do not fit these data for which the IBM SPSS® Amos, version 22, structural equations package will be used. Figure 2 shows the estimated standardized fit indices for a structural equation model obtained in the confirmatory factor analysis.

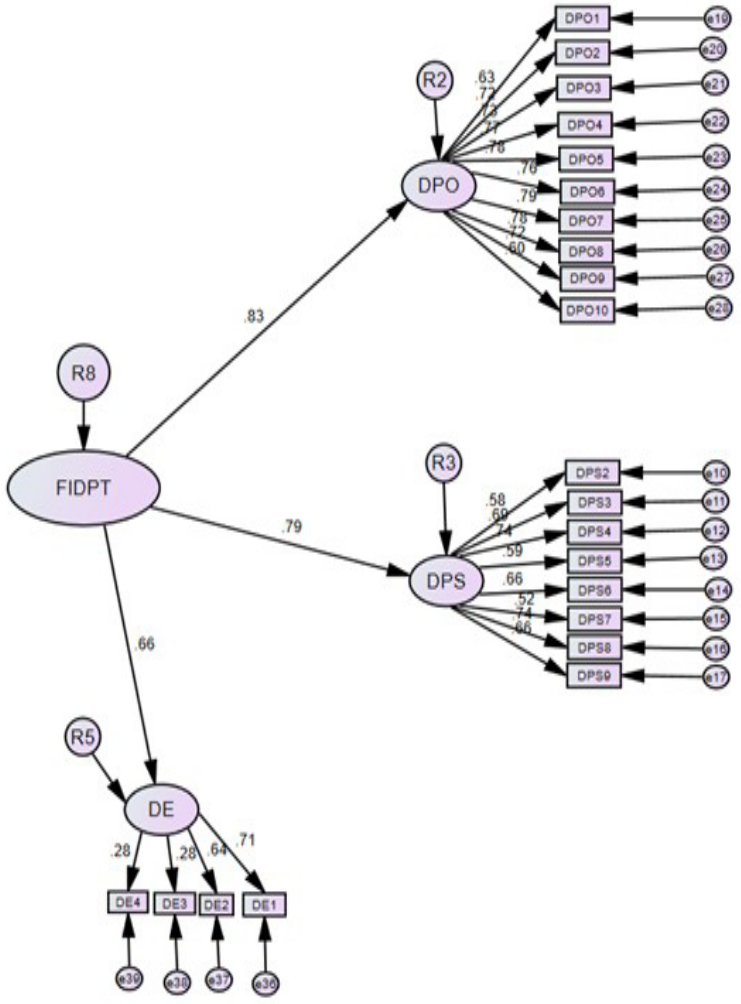

Figure 2. Standardized estimates

The factor loadings for each item represent the percentage that the variable explains the corresponding factor. For this model with 22 variables corresponding to three dimensions, of which four are from the economic dimension, eight from the pico-social dimension and ten from the psycho-organizational dimension, the result obtained shows only two factor loadings with values lower than the minimum desirable

0.3. The variables are DE4 and DE3 with a factor loading of 0.28, in addition to obtaining high errors of 1.68 and 1.57 respectively. The larger the error, the less the item explains the corresponding dimension, which is why these dimensions DE4 and DE3 will be eliminated. Figure 3 shows the unstandardized estimates for the structural equation model obtained in the confirmatory factor analysis after eliminating variables DE4 and DE3.

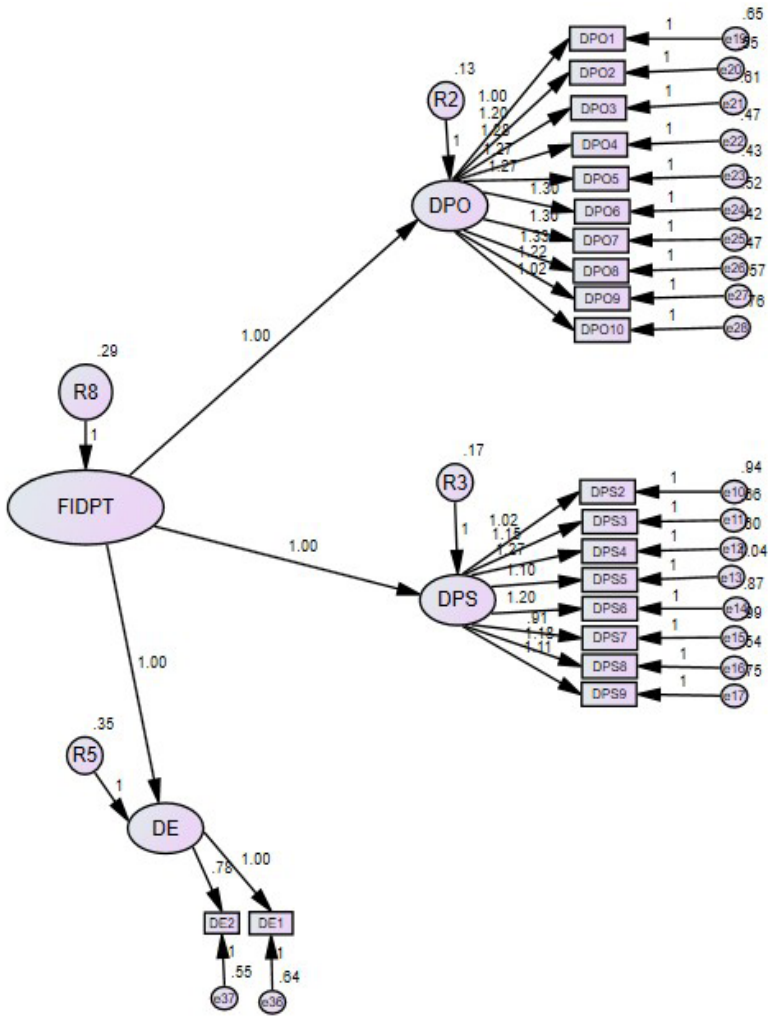

Figure 3. Non-standardized estimates

Evaluation of Model Fit

Measurement model fit is a search for the best model that can statistically strengthen the explanation of the final theoretical model that is proposed as an outcome, for which absolute fit measures, incremental fit measures and parsimony fit measures are evaluated. The incremental fit measures examine the proposed factor model as a null model; the absolute fit measures express the amount of variability that cannot be explained by the factor model and the parsimony fit measures determine the degree to which the model explains the observed data matrix. Table 19 shows the results of the indicators of the measures of model fit.

Table 19. Measures of model fit

	Absolute adjustment measures		Incremental adjustment measures			Parsimony adjustment measures			
Models	CMIN	CMIN/DF	CFI	TLI	NFI	P RATIO	PCFI	RMSEA	AIC
Second order model	532.342	3.169	0.925	0.915	0.895	0.884	0.818	0.065	616.342
Decision criteria	Smaller Chi-square is better	Acceptable value <3	≥ 0.90 excellent	≥ 0.90 excellent	≥ 0.90 appropriate	≥ 0.90 excellent	≥ 0.90 appropriate	Lower 0.08 appropriate	Lower Indicates parsimony (Good)

Source: Own elaboration based on the results of the adjustment measures.

For the CMIN/DF an acceptable value should be <3, so the obtained result of 3.169 is good. For the CFI comparative goodness of fit index an acceptable value should be ≥ 0.90, so the obtained result of 0.925 is excellent. For the Tucker Lewis incremental index an acceptable value should be ≥ 0.90, so the obtained result of 0.915 is excellent. For the normed fit index NFI which expresses the proportion of the total variability explained by the proposed factor model, being appropriate ≥ 0.90, so the obtained result 0.888 is acceptable. As for the parsimony fit measures, the fit index P RATIO considers the individual comparative parsimony index PCFI being acceptable values ≥ 0.90, so the result 0.818 is acceptable. The quadratic approximation error of fit measure RMSEA is appropriate for values <0.08, so the result of 0.065 is good. Finally, the information criterion index AIC being a result with minor trend indicates acceptable parsimony. Finally, table 18 shows the summary of the factors.

FINDINGS

The results obtained give a final statistically proven theoretical model, which from the Mahalanobis analysis for the assessment of atypical data, a result was obtained that identified the elimination of 27 atypical data, adjusting the data from 542 to 515 individuals. When carrying out the exploratory factor analysis in the reduction of dimensions, 2 variables with low factor loadings were identified, which were DE5 and DPS1, being eliminated, adjusting with this elimination the change from 24 to 22 variables. The results obtained from the descriptive factor analysis of the reduction of dimensions using the method of extraction of principal components based on eigenvalues of 1 and varimax rotation, the analysis was carried out on the three dimensions, obtaining a result of explained variance of 53.521, greater than the minimum desirable 50% and the KMO of 0.941 greater than the minimum desirable 0.7. Bartlett's Chi-square test of sphericity should be less than 0.05 and the significance level

obtained was .000. The total variance explained reaches a cumulative 53.521% in three principal components with twenty-two adjusted variables, proving the excellent construct validity, however, factor loadings below 0.3 and errors above 1.5 for variables DE4 and DE3 determine that they should be eliminated. When performing confirmatory factor analysis with the 20 variables and three dimensions, the results of the estimated standardized fit indices for a structural equation model find that the obtained CMIN/DF of 3.169 is good near at <3. For the comparative goodness of fit index CFI obtained of 0.925 is good at≥0.90. For the TLI increase index obtained of 0.915 it is good at≥0.90. For the normed fit index NFI obtained 0.895 is acceptable as it is close to ≥0.90. As for the parsimony fit measures, the obtained PRATIO fit index of 0.884 is acceptable. The RMSEA quadratic approximation error of fit measure is appropriate for values <0.08, so the result of 0.065 is good. The results obtained find that statistically the theoretical model is favorably explained. Table 20 shows the result of this research, the factors inhibiting the development of technological projects in the investigated HEIs in Ciudad Juárez.

Table 20. Inhibiting factors for the development of technological projects in HEIs in Ciudad Juárez

Psycho-Organisational Dimension	Económic Dimension	Psycho-Social Dimension
** The lack of updating and relevance of the didactic content of curricula oriented towards technological development.	** The financial resources offered to carry out the project are not sufficient.	** Little creativity.
** The lack of an organizational, administrative and operational structure (procedural).	** Payments and/or financial incentives for students, teachers and researchers are not sufficient.	** Fear of failure.
** Linking with the productive sector is not enough.		** Lack of interest.
** The infrastructure and equipment support for research and development of technological projects is not sufficient.		** The adverse family context.
** Poor administrative support.		** Learning environments and habits for the development of technological projects are not adequate.
** The lack of a culture of technological development.		** Theoretical and practical expertise is not enough.
** Awareness and access to technological formation is insufficient.		** The absence of recognition for achievements.
** The lack of specialized teaching support.		** Low motivation.
** Dissemination, promotion and outreach towards innovation and project development is not enough.		
** The lack of change in government policy on this issue.		

DISCUSSION

The factors identified in this research are the result of the direct perception of students, pupils, and researchers related to the generation of innovation and technological development projects in the Ciudad Juárez region. Given that no previous research has been conducted in this region in this area, the results obtained with the explanatory factor weights identify the factors that impact project development in HEIs, directly affecting indicators of the generation of new product designs, processes, and intellectual property in the region and the country. The existing gap in the participation of the HEI community in the technological development of the region and the country should be reduced to the extent that the actors who define government public policies and administrative systems in HEIs stimulate and innovate regulations and operational structures for the generation of innovation

and technological development projects, their formalization as intellectual property, and their commercialization. The participation of HEIs is perceived as significantly successful in contributing to the technological and economic development of the region, if these inhibitors are overcome.

Future Lines of Research

This research identifies the factors that inhibit the participation of students, teachers and researchers in the development of technological projects in the Higher Education Institutions of Ciudad Juárez. A second phase of this research will be continued in order to assess and identify the factors that are affecting the link between SP companies and HEIs both public and private for the generation of innovation and technological development projects in the Ciudad Juárez region. As a third phase, this line of research considers structuring an operational model for the development of technological projects, which includes procedural actions to be carried out in a structured manner to preventively reduce the adverse factors identified in these two stages.

ACKNOWLEDGEMENT

Special thanks to the Consejo de Humanidades, Ciencia y Tecnología (CONAHCYT) for the support provided to Tomás Francisco Limones Meraz through the Programme "Estancias Posdoctorales Académicas en México 22 (3)" in the preparation of this article.

REFERENCES

Bosch, F. A. J., Van Den, Volberda, H. W., Boer, M., De Michael, L., Reilly, O., Iii, C. A. O. R., Andrews, D. (1999). Coevolution of Firm Absorptive Capacity and Knowledge Environment: Organizational Forms and Combinative Capabilities; ORGANIZATION SCIENCE, 1999 INFORMS Vol. 10, No. 5, September–October 1999, pp. 551–568; https://doi.org/10.1287/orsc.10.5.551

Calderón-Martínez, G. (2014). Patentes en instituciones de educación superior en México. *Revista de la Educación Superior*, 43(170), 37-56.

Carmen Joham & Elizabeth Hobson (2003), "A Systemic Approach to IT Policy: A new perspective for developing countries", Association for Information Systems AIS Electronic Library (AISeL) ECIS 2003 Proceedings: http://aisel.aisnet.org/ecis2003.

CONAHCYT (2021); Programa Especial de Ciencia, Tecnología e Innovación 2021-2024 (PECITI); https://conacyt.mx/conacyt/peciti

CONAHCYT (2023); Programas Nacionales Estratégicos; https://conacyt.mx/convocatorias/programas-nacionales-estrategicos (ProNacEs)

De Fuentes, C., y Dutrénit, G. (2017), 'Technological capabilities for university industry links in the Mexican manufacturing sector',

Ekonomiaz N.º 92, 2.º semestre, 2017, pp. 246-273

Etzkowitz, H., y Leydesdorff, L. (2000), 'The dynamics of innovation: from national systems and "mode 2" to a triple helix of university–industry–government relations', *Elsevier Science,* Research Policy 29 2000. pp. 109–123.

Feser, E. J., & Bergman, E. M. (2000), 'National industry cluster templates: A framework for applied regional cluster analysis', *Regional Studies*, *34*(1), 1–19. https://doi.org/10.1080/00343400050005844

Filippetti, A., y Savona, M. (2017), 'University–industry linkages and academic engagements: individual behaviours and firms' barriers. Introduction to the special section', *J Technol Transf,* vol. 42, pp. 719–729, Published online: 28 April 2017.

Flores, C., Ordoñez, A., y Viramontes, O. (2015), 'Factores que afectan la investigación científica en las instituciones de educación superior (Área Económico-Administrativa)', *XX Congreso Internacional de Contaduría, Administración e informática*, octubre 7,8 y 9 de 2015, Ciudad Universitaria México, D.F.

Limones Meráz, T. F., Flores Amador, J., y Reaiche, C. (2021). Linking HEIs with the production sector: A communication approach between key actors in Ciudad Juárez, Mexico. *Industry and Higher Education*, *35*(1), 46-60. https://doi.org/10.1177/0950422220922059

Limones T., Noriega S., & García R., 2023, "Validación del instrumento de medición para la identificación de los factores que inhiben la participación de alumnos, docentes e investigadores en el desarrollo de proyectos tecnológicos en las IES de ciudad Juárez." Primera edición, 2023 CENID; pag. 54–75; ISBN:978-607-8830-21-3; www.cenid.org

Mauro Alonso 2021, Resignificaciones de los recursos institucionales de gobernanza de la «tercera misión» de las universidades: el caso de los Proyectos de Desarrollo Tecnológico y Social (PDTS) de Argentina; Revista de Sociología de la Educación (RASE) 2021, vol. 14, n.º2 l ojs.uv.es/rase l ISSN: 2605-1923 doi:http://dx.doi.org/10.7203/RASE.14.2.18128

Palacios, L., Garcés, L., Valencia, A. y Benjumea, A. (2021), "Factores que favorecen la realización de proyectos investigativos en estudiantes universitarios", Formación Universitaria, Vol. 14(4), 93-102 (2021), http://dx.doi.org/10.4067/S0718-50062021000400093

Paula Elosua Oliden y Bruno D. Zumbo, (2008), "Coeficientes de fiabilidad para escalas de respuesta categórica ordenada" Psicothema 2008. Vol. 20, nº 4, pp. 896-

901 ISSN 0214 - 9915 CODEN PSOTEG
www.psicothema.com

Solleiro, J.L. y Castañon Ibarra, R. C. (2008).
Gestión tecnológica: conceptos y prácticas.